PRODUTOS DESENVOLVIDOS E FABRICADOS NO BRASIL!

Fresas de **Metal DURO**

Conheça nossa linha de fresas de metal duro para diversas aplicações.

Linha DS_ECO, melhor Custo Benefício para seu Processo;
Linha DS_MEGA, Alto Rendimento em Materiais até 55 HRC;
Linha DS_POWER para usinagem de Materiais Temperados;
Linha DS_ALUM para usinagem de Não Ferrosos.

DSdrill CUTTING TOOLS

Mais de 20 anos atuando no segmento de ferramentas e soluções.

Pensou em ferramentas, consulte DSDrill.

ÍNDICE

Pensou em ferramentas, consulte DSDrill.

TABELA DE CÓDIGOS

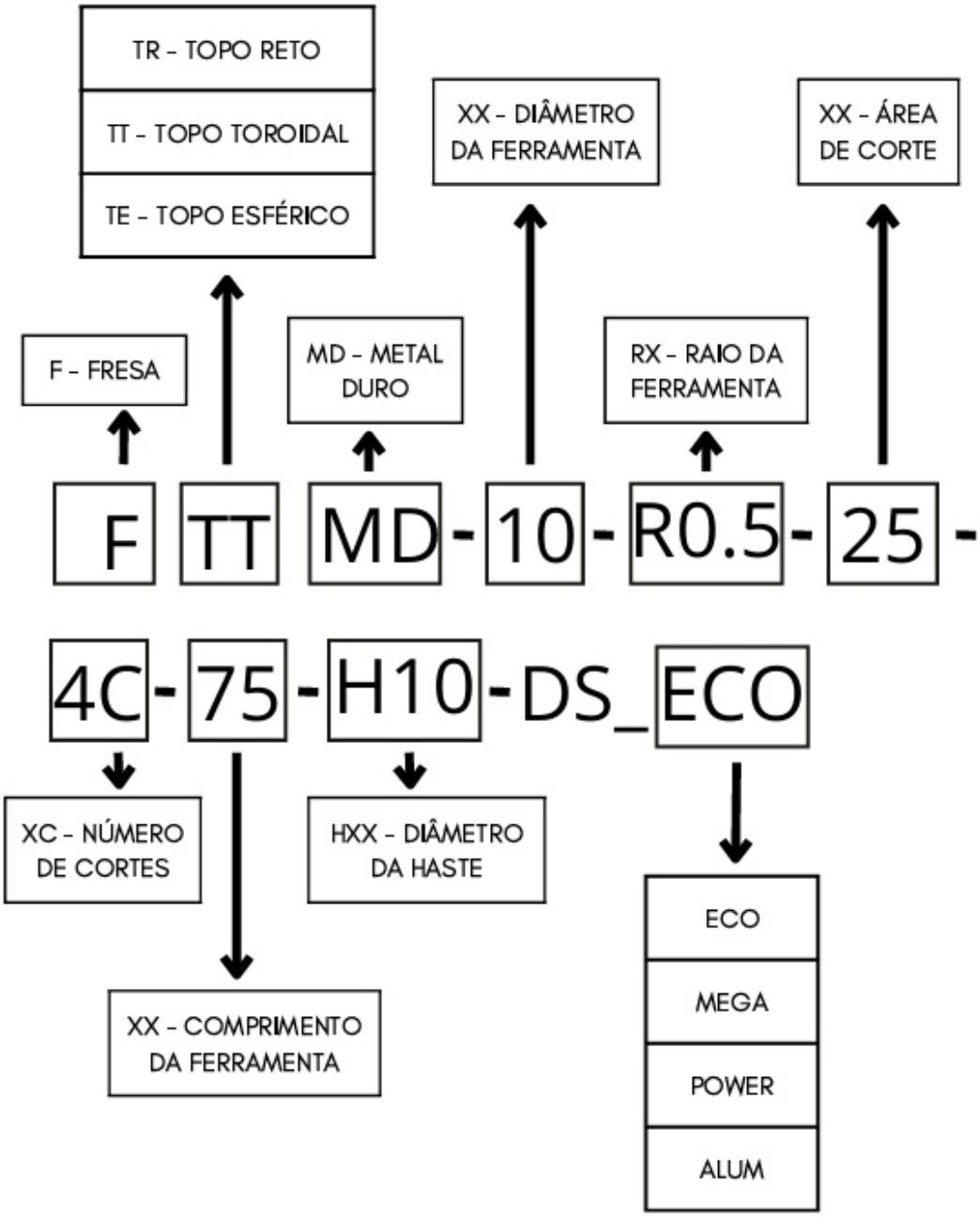

P Aços Carbono, Aços Liga

M Aços Inoxidáveis

K Ferros Fundidos

N Não Ferrosos

S Ligas Resistentes ao Calor, Titânio

H Aços Temperados, Ferro Fundido Endurecido

Pensou em ferramentas, consulte DSDrill.

DS_ECO

Topo Reto

Ø 3-25 | 4C | TiAlN | 38° | Passo Dif.

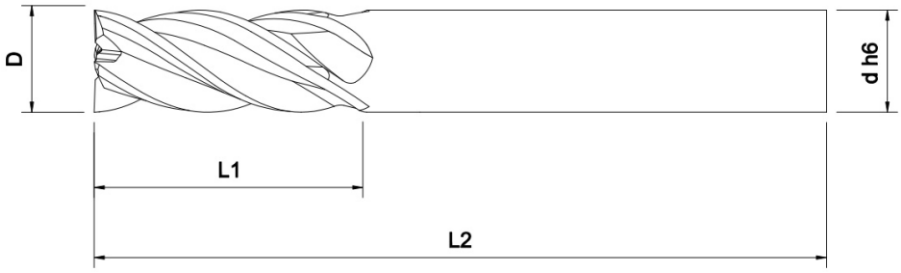

CÓDIGO DSDRILL	D	L1	L2	d	C
FTRMD-03-8-4C-50-H3-DS_ECO	3	8	50	3	4
FTRMD-04-10-4C-50-H4-DS_ECO	4	10	50	4	4
FTRMD-05-13-4C-50-H5-DS_ECO	5	13	50	5	4
FTRMD-06-15-4C-50-H6-DS_ECO	6	15	50	6	4
FTRMD-08-20-4C-60-H8-DS_ECO	8	20	60	8	4
FTRMD-10-25-4C-75-H10-DS_ECO	10	25	75	10	4
FTRMD-12-30-4C-75-H12-DS_ECO	12	30	75	12	4
FTRMD-14-45-4C-100-H14-DS_ECO	14	45	100	14	4
FTRMD-16-45-4C-100-H16-DS_ECO	16	45	100	16	4
FTRMD-20-45-4C-100-H20-DS_ECO	20	45	100	20	4
FTRMD-25-45-4C-100-H25-DS_ECO	25	45	100	25	4

CÓDIGO DSDRILL	D	L1	L2	d	C
FTRMD-03-12-4C-75-H3-DS_ECO	3	12	75	3	4
FTRMD-04-12-4C-75-H4-DS_ECO	4	12	75	4	4
FTRMD-05-15-4C-75-H5-DS_ECO	5	15	75	5	4
FTRMD-06-15-4C-100-H6-DS_ECO	6	15	100	6	4
FTRMD-08-20-4C-100-H8-DS_ECO	8	20	100	8	4
FTRMD-10-25-4C-100-H10-DS_ECO	10	25	100	10	4
FTRMD-12-30-4C-100-H12-DS_ECO	12	30	100	12	4
FTRMD-14-45-4C-125-H14-DS_ECO	14	45	125	14	4
FTRMD-16-45-4C-125-H16-DS_ECO	16	45	125	16	4
FTRMD-20-45-4C-125-H20-DS_ECO	20	45	125	20	4
FTRMD-25-45-4C-125-H25-DS_ECO	25	45	125	25	4

Topo Reto

Ø 3-25 | 2C | TiAlN | 38°

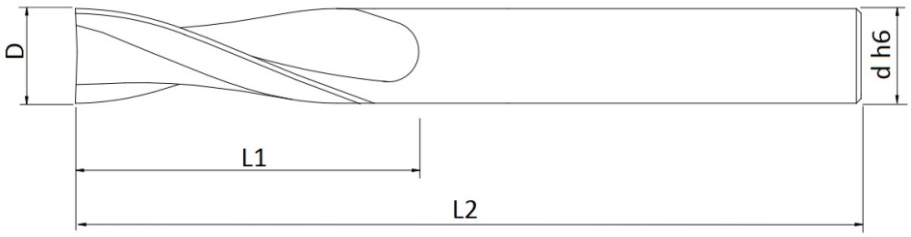

CÓDIGO DSDRILL	D	L1	L2	d	C
FTRMD-03-8-2C-50-H3-DS_ECO	3	8	50	3	2
FTRMD-04-10-2C-50-H4-DS_ECO	4	10	50	4	2
FTRMD-05-13-2C-50-H5-DS_ECO	5	13	50	5	2
FTRMD-06-15-2C-50-H6-DS_ECO	6	15	50	6	2
FTRMD-08-20-2C-60-H8-DS_ECO	8	20	60	8	2
FTRMD-10-25-2C-75-H10-DS_ECO	10	25	75	10	2
FTRMD-12-30-2C-75-H12-DS_ECO	12	30	75	12	2
FTRMD-14-45-2C-100-H14-DS_ECO	14	45	100	14	2
FTRMD-16-45-2C-100-H16-DS_ECO	16	45	100	16	2
FTRMD-20-45-2C-100-H20-DS_ECO	20	45	100	20	2
FTRMD-25-45-2C-100-H25-DS_ECO	25	45	100	25	2

CÓDIGO DSDRILL	D	L1	L2	d	C
FTRMD-03-12-2C-75-H3-DS_ECO	3	12	75	3	2
FTRMD-04-12-2C-75-H4-DS_ECO	4	12	75	4	2
FTRMD-05-15-2C-75-H5-DS_ECO	5	15	75	5	2
FTRMD-06-15-2C-100-H6-DS_ECO	6	15	100	6	2
FTRMD-08-20-2C-100-H8-DS_ECO	8	20	100	8	2
FTRMD-10-25-2C-100-H10-DS_ECO	10	25	100	10	2
FTRMD-12-30-2C-100-H12-DS_ECO	12	30	100	12	2
FTRMD-14-45-2C-125-H14-DS_ECO	14	45	125	14	2
FTRMD-16-45-2C-125-H16-DS_ECO	16	45	125	16	2
FTRMD-20-45-2C-125-H20-DS_ECO	20	45	125	20	2
FTRMD-25-45-2C-125-H25-DS_ECO	25	45	125	25	2

DS_ECO

Topo Toroidal Raio 0,5mm

Ø 3-25 | 4C | TiAlN | 38° | Passo Dif. | R0.5

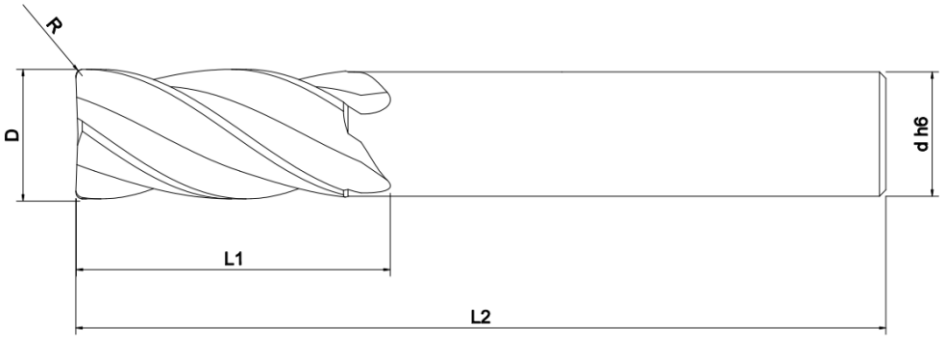

CÓDIGO DSDRILL	D	L1	L2	d	C	R
FTTMD-03-R0.5-8-4C-50-H3-DS_ECO	3	8	50	3	4	0.5
FTTMD-04-R0.5-10-4C-50-H4-DS_ECO	4	10	50	4	4	0.5
FTTMD-05-R0.5-13-4C-50-H5-DS_ECO	5	13	50	5	4	0.5
FTTMD-06-R0.5-15-4C-50-H6-DS_ECO	6	15	50	6	4	0.5
FTTMD-08-R0.5-20-4C-60-H8-DS_ECO	8	20	60	8	4	0.5
FTTMD-10-R0.5-25-4C-75-H10-DS_ECO	10	25	75	10	4	0.5
FTTMD-12-R0.5-30-4C-75-H12-DS_ECO	12	30	75	12	4	0.5
FTTMD-14-R0.5-45-4C-100-H14-DS_ECO	14	45	100	14	4	0.5
FTTMD-16-R0.5-45-4C-100-H16-DS_ECO	16	45	100	16	4	0.5
FTTMD-20-R0.5-45-4C-100-H20-DS_ECO	20	45	100	20	4	0.5
FTTMD-25-R0.5-45-4C-100-H25-DS_ECO	25	45	100	25	4	0.5

CÓDIGO DSDRILL	D	L1	L2	d	C	R
FTTMD-03-R0.5-12-4C-75-H3-DS_ECO	3	12	75	3	4	0.5
FTTMD-04-R0.5-12-4C-75-H4-DS_ECO	4	12	75	4	4	0.5
FTTMD-05-R0.5-15-4C-75-H5-DS_ECO	5	15	75	5	4	0.5
FTTMD-06-R0.5-15-4C-100-H6-DS_ECO	6	15	100	6	4	0.5
FTTMD-08-R0.5-20-4C-100-H8-DS_ECO	8	20	100	8	4	0.5
FTTMD-10-R0.5-25-4C-100-H10-DS_ECO	10	25	100	10	4	0.5
FTTMD-12-R0.5-30-4C-100-H12-DS_ECO	12	30	100	12	4	0.5
FTTMD-14-R0.5-45-4C-125-H14-DS_ECO	14	45	125	14	4	0.5
FTTMD-16-R0.5-45-4C-125-H16-DS_ECO	16	45	125	16	4	0.5
FTTMD-20-R0.5-45-4C-125-H20-DS_ECO	20	45	125	20	4	0.5
FTTMD-25-R0.5-45-4C-125-H25-DS_ECO	25	45	125	25	4	0.5

Topo Toroidal Raio 1,0mm

Ø 8-25 | 4C | TiAlN | 38° | Passo Dif. | R1.0

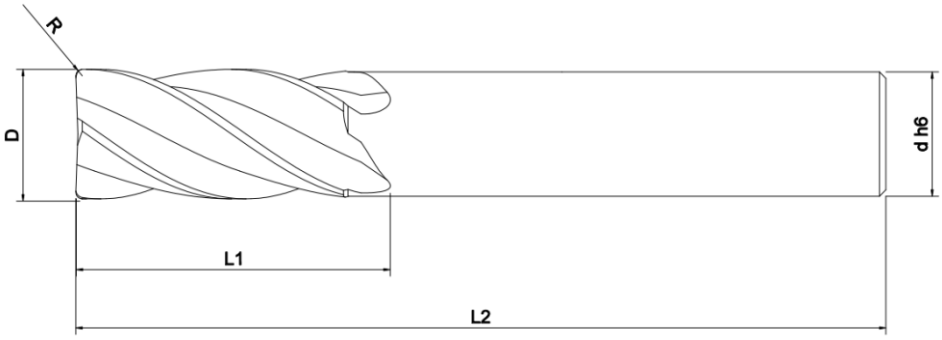

CÓDIGO DSDRILL	D	L1	L2	d	C	R
FTTMD-08-R1-20-4C-60-H8-DS_ECO	8	20	60	8	4	1
FTTMD-10-R1-25-4C-75-H10-DS_ECO	10	25	75	10	4	1
FTTMD-12-R1-30-4C-75-H12-DS_ECO	12	30	75	12	4	1
FTTMD-14-R1-45-4C-100-H14-DS_ECO	14	45	100	14	4	1
FTTMD-16-R1-45-4C-100-H16-DS_ECO	16	45	100	16	4	1
FTTMD-20-R1-45-4C-100-H20-DS_ECO	20	45	100	20	4	1
FTTMD-25-R1-45-4C-100-H25-DS_ECO	25	45	100	25	4	1

CÓDIGO DSDRILL	D	L1	L2	d	C	R
FTTMD-08-R1-20-4C-100-H8-DS_ECO	8	20	100	8	4	1
FTTMD-10-R1-25-4C-100-H10-DS_ECO	10	25	100	10	4	1
FTTMD-12-R1-30-4C-100-H12-DS_ECO	12	30	100	12	4	1
FTTMD-14-R1-45-4C-125-H14-DS_ECO	14	45	125	14	4	1
FTTMD-16-R1-45-4C-125-H16-DS_ECO	16	45	125	16	4	1
FTTMD-20-R1-45-4C-125-H20-DS_ECO	20	45	125	20	4	1
FTTMD-25-R1-45-4C-125-H25-DS_ECO	25	45	125	25	4	1

DS_ECO

Topo Esférico

Ø 3-20 | 2C | TiAlN | 38°

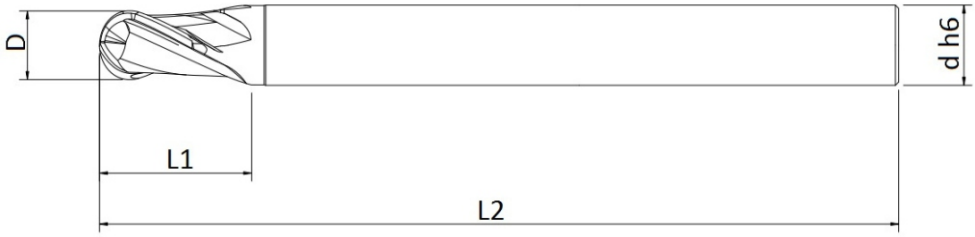

CÓDIGO DSDRILL	D	L1	L2	d	C
FTEMD-03-6-2C-50-H3-DS_ECO	3	6	50	3	2
FTEMD-04-8-2C-50-H4-DS_ECO	4	8	50	4	2
FTEMD-05-10-2C-50-H5-DS_ECO	5	10	50	5	2
FTEMD-06-12-2C-50-H6-DS_ECO	6	12	50	6	2
FTEMD-08-16-2C-60-H8-DS_ECO	8	16	60	8	2
FTEMD-10-20-2C-75-H10-DS_ECO	10	20	75	10	2
FTEMD-12-25-2C-75-H12-DS_ECO	12	25	75	12	2
FTEMD-14-30-2C-75-H14-DS_ECO	14	30	75	14	2
FTEMD-16-30-2C-75-H16-DS_ECO	16	30	75	16	2
FTEMD-20-40-2C-100-H20-DS_ECO	20	40	100	20	2

CÓDIGO DSDRILL	D	L1	L2	d	C
FTEMD-03-6-2C-75-H3-DS_ECO	3	6	75	3	2
FTEMD-04-8-2C-75-H4-DS_ECO	4	8	75	4	2
FTEMD-05-10-2C-75-H5-DS_ECO	5	10	75	5	2
FTEMD-06-12-2C-100-H6-DS_ECO	6	12	100	6	2
FTEMD-08-16-2C-100-H8-DS_ECO	8	16	100	8	2
FTEMD-10-20-2C-100-H10-DS_ECO	10	20	100	10	2
FTEMD-12-25-2C-100-H12-DS_ECO	12	25	100	12	2
FTEMD-14-30-2C-110-H14-DS_ECO	14	30	110	14	2
FTEMD-16-30-2C-110-H16-DS_ECO	16	30	110	16	2
FTEMD-20-40-2C-125-H20-DS_ECO	20	40	125	20	2

Topo Esférico

Ø 3-20 | 4C | TiAlN | 38°

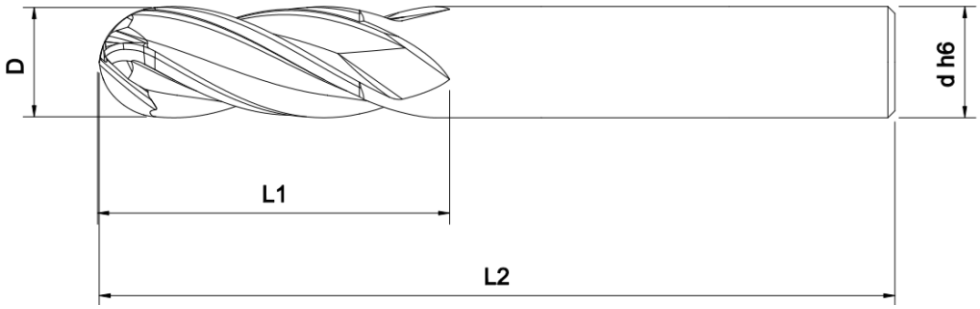

CÓDIGO DSDRILL	D	L1	L2	d	C
FTEMD-03-6-4C-50-H3-DS_ECO	3	6	50	3	4
FTEMD-04-8-4C-50-H4-DS_ECO	4	8	50	4	4
FTEMD-05-10-4C-50-H5-DS_ECO	5	10	50	5	4
FTEMD-06-12-4C-50-H6-DS_ECO	6	12	50	6	4
FTEMD-08-16-4C-60-H8-DS_ECO	8	16	60	8	4
FTEMD-10-20-4C-75-H10-DS_ECO	10	20	75	10	4
FTEMD-12-25-4C-75-H12-DS_ECO	12	25	75	12	4
FTEMD-14-30-4C-75-H14-DS_ECO	14	30	75	14	4
FTEMD-16-30-4C-75-H16-DS_ECO	16	30	75	16	4
FTEMD-20-40-4C-100-H20-DS_ECO	20	40	100	20	4

CÓDIGO DSDRILL	D	L1	L2	d	C
FTEMD-03-6-4C-75-H3-DS_ECO	3	6	75	3	4
FTEMD-04-8-4C-75-H4-DS_ECO	4	8	75	4	4
FTEMD-05-10-4C-75-H5-DS_ECO	5	10	75	5	4
FTEMD-06-12-4C-100-H6-DS_ECO	6	12	100	6	4
FTEMD-08-16-4C-100-H8-DS_ECO	8	16	100	8	4
FTEMD-10-20-4C-100-H10-DS_ECO	10	20	100	10	4
FTEMD-12-25-4C-100-H12-DS_ECO	12	25	100	12	4
FTEMD-14-30-4C-110-H14-DS_ECO	14	30	110	14	4
FTEMD-16-30-4C-110-H16-DS_ECO	16	30	110	16	4
FTEMD-20-40-4C-125-H20-DS_ECO	20	40	125	20	4

Referência de Dados de Corte - Linha DS_ECO

P	M	K	N	S	H
●	●	●			

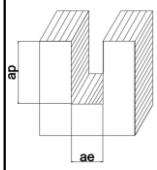

MATERIAL	DUREZA	VC (m/min)	D 3	4	5	6	8	10	12	14	16	20	25
			fz² (mm/z)										
1.1730	640 N/mm²	180	0.019	0.025	0.031	0.037	0.050	0.062	0.075	0.088	0.100	0.125	0.150
1.2083	780 N/mm²	135	0.012	0.018	0.025	0.030	0.040	0.050	0.060	0.070	0.080	0.100	0.120
1.2085	1080 N/mm²	135	0.012	0.018	0.025	0.030	0.040	0.050	0.060	0.070	0.080	0.100	0.120
1.2162	660 N/mm²	160	0.019	0.025	0.031	0.037	0.050	0.062	0.075	0.088	0.100	0.125	0.125
1.2311	1080 N/mm²	150	0.017	0.022	0.027	0.033	0.044	0.055	0.066	0.077	0.088	0.110	0.140
1.2312	1080 N/mm²	160	0.017	0.022	0.027	0.033	0.044	0.055	0.066	0.077	0.088	0.110	0.140
1.2316	1010 N/mm²	135	0.012	0.018	0.025	0.030	0.040	0.050	0.060	0.070	0.080	0.100	0.120
1.2343	780 N/mm²	160	0.019	0.025	0.027	0.037	0.050	0.062	0.075	0.088	0.100	0.125	0.145
1.2379	780 N/mm²	135	0.012	0.018	0.025	0.030	0.040	0.050	0.060	0.070	0.080	0.100	0.120
1.2714HH	1350 N/mm²	100	0.012	0.018	0.025	0.030	0.040	0.050	0.060	0.070	0.080	0.100	0.120
1.2767	830 N/mm²	160	0.017	0.022	0.027	0.033	0.044	0.055	0.066	0.077	0.088	0.110	0.140
1.2842	775 N/mm²	160	0.017	0.022	0.027	0.033	0.044	0.055	0.066	0.077	0.088	0.110	0.140
Steel	1400 N/mm²	70	0.012	0.018	0.025	0.030	0.040	0.050	0.060	0.070	0.080	0.100	0.120

ae = 1 x D
ap = 1 x D

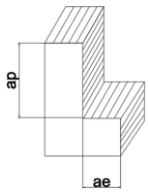

MATERIAL	DUREZA	VC (m/min)	D 3	4	5	6	8	10	12	14	16	20	25
			fz² (mm/z)										
1.1730	640 N/mm²	220	0.026	0.033	0.039	0.044	0.061	0.077	0.094	0.102	0.110	0.132	0.187
1.2083	780 N/mm²	145	0.018	0.023	0.026	0.030	0.041	0.053	0.064	0.070	0.075	0.090	0.128
1.2085	1080 N/mm²	145	0.018	0.023	0.026	0.030	0.041	0.053	0.064	0.070	0.075	0.090	0.128
1.2162	660 N/mm²	220	0.025	0.030	0.035	0.040	0.055	0.070	0.085	0.092	0.100	0.120	0.170
1.2311	1080 N/mm²	160	0.020	0.024	0.028	0.032	0.044	0.056	0.068	0.074	0.080	0.096	0.136
1.2312	1080 N/mm²	165	0.018	0.023	0.026	0.030	0.041	0.053	0.064	0.070	0.075	0.090	0.128
1.2316	1010 N/mm²	145	0.018	0.023	0.026	0.030	0.041	0.053	0.064	0.070	0.075	0.090	0.128
1.2343	780 N/mm²	175	0.025	0.030	0.035	0.040	0.055	0.070	0.085	0.092	0.100	0.120	0.170
1.2379	780 N/mm²	145	0.018	0.023	0.026	0.030	0.041	0.053	0.064	0.070	0.075	0.090	0.128
1.2714HH	1350 N/mm²	125	0.018	0.023	0.026	0.030	0.041	0.053	0.064	0.070	0.075	0.090	0.128
1.2767	830 N/mm²	165	0.026	0.029	0.033	0.038	0.052	0.067	0.081	0.088	0.095	0.114	0.162
1.2842	775 N/mm²	165	0.025	0.030	0.035	0.040	0.055	0.070	0.085	0.092	0.100	0.120	0.170
Steel	1400 N/mm²	110	0.015	0.017	0.019	0.022	0.030	0.039	0.047	0.050	0.055	0.066	0.094

ae = 0.5 x D
ap = 1 x D

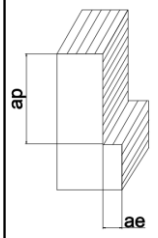

MATERIAL	DUREZA	VC (m/min)	D 3	4	5	6	8	10	12	14	16	20	25
			fz² (mm/z)										
1.1730	640 N/mm²	300	0.022	0.026	0.030	0.033	0.044	0.061	0.072	0.080	0.088	0.105	0.154
1.2083	780 N/mm²	175	0.015	0.018	0.020	0.023	0.030	0.041	0.049	0.055	0.060	0.071	0.105
1.2085	1080 N/mm²	175	0.015	0.018	0.020	0.023	0.030	0.041	0.049	0.055	0.060	0.071	0.105
1.2162	660 N/mm²	300	0.021	0.024	0.027	0.030	0.040	0.055	0.065	0.072	0.080	0.095	0.140
1.2311	1080 N/mm²	220	0.016	0.019	0.022	0.024	0.032	0.044	0.052	0.058	0.064	0.076	0.112
1.2312	1080 N/mm²	225	0.015	0.018	0.020	0.023	0.030	0.041	0.049	0.055	0.060	0.071	0.105
1.2316	1010 N/mm²	175	0.015	0.018	0.020	0.023	0.030	0.041	0.049	0.055	0.060	0.071	0.105
1.2343	780 N/mm²	240	0.021	0.024	0.027	0.030	0.040	0.055	0.065	0.072	0.080	0.095	0.140
1.2379	780 N/mm²	175	0.015	0.018	0.020	0.023	0.030	0.041	0.049	0.055	0.060	0.071	0.105
1.2714HH	1350 N/mm²	160	0.015	0.018	0.020	0.023	0.030	0.041	0.049	0.055	0.060	0.071	0.105
1.2767	830 N/mm²	225	0.020	0.023	0.026	0.029	0.038	0.052	0.062	0.070	0.076	0.090	0.133
1.2842	775 N/mm²	225	0.021	0.024	0.027	0.030	0.040	0.055	0.065	0.072	0.080	0.095	0.140
Steel	1400 N/mm²	140	0.012	0.014	0.016	0.018	0.024	0.033	0.039	0.044	0.048	0.057	0.084

ae = 0.1 x D
ap = 1.5 x D

Pensou em ferramentas, consulte DSDrill.

DS_MEGA

Topo Reto

Ø 3-25 | 4C | AlTiN TiSiXN | 38° | Passo Dif.

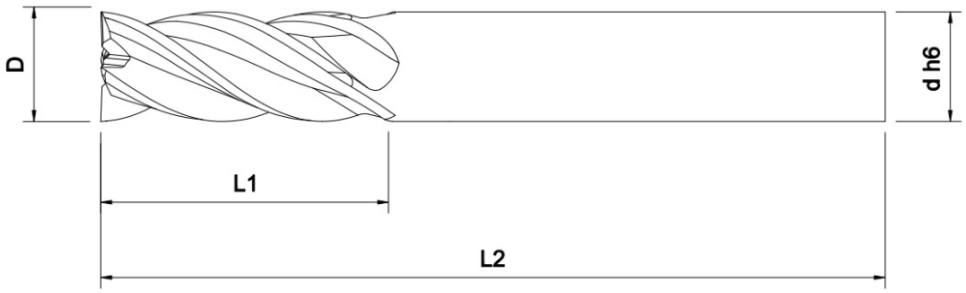

CÓDIGO DSDRILL	D	L1	L2	d	C
FTRMD-03-8-4C-50-H3-DS_MEGA	3	8	50	3	4
FTRMD-04-10-4C-50-H4-DS_MEGA	4	10	50	4	4
FTRMD-05-13-4C-50-H5-DS_MEGA	5	13	50	5	4
FTRMD-06-15-4C-50-H6-DS_MEGA	6	15	50	6	4
FTRMD-08-20-4C-60-H8-DS_MEGA	8	20	60	8	4
FTRMD-10-25-4C-75-H10-DS_MEGA	10	25	75	10	4
FTRMD-12-30-4C-75-H12-DS_MEGA	12	30	75	12	4
FTRMD-14-45-4C-100-H14-DS_MEGA	14	45	100	14	4
FTRMD-16-45-4C-100-H16-DS_MEGA	16	45	100	16	4
FTRMD-20-45-4C-100-H20-DS_MEGA	20	45	100	20	4
FTRMD-25-45-4C-100-H25-DS_MEGA	25	45	100	25	4

CÓDIGO DSDRILL	D	L1	L2	d	C
FTRMD-03-12-4C-75-H3-DS_MEGA	3	12	75	3	4
FTRMD-04-12-4C-75-H4-DS_MEGA	4	12	75	4	4
FTRMD-05-15-4C-75-H5-DS_MEGA	5	15	75	5	4
FTRMD-06-15-4C-100-H6-DS_MEGA	6	15	100	6	4
FTRMD-08-20-4C-100-H8-DS_MEGA	8	20	100	8	4
FTRMD-10-25-4C-100-H10-DS_MEGA	10	25	100	10	4
FTRMD-12-30-4C-100-H12-DS_MEGA	12	30	100	12	4
FTRMD-14-45-4C-125-H14-DS_MEGA	14	45	125	14	4
FTRMD-16-45-4C-125-H16-DS_MEGA	16	45	125	16	4
FTRMD-20-45-4C-125-H20-DS_MEGA	20	45	125	20	4
FTRMD-25-45-4C-125-H25-DS_MEGA	25	45	125	25	4

Topo Reto

Ø 3-25 | 2C | AlTiN TiSiXN | 38°

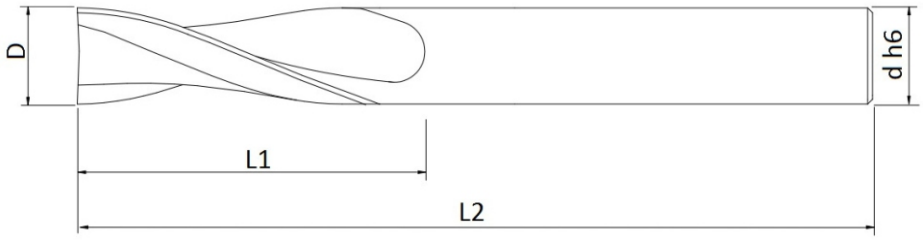

CÓDIGO DSDRILL	D	L1	L2	d	C
FTRMD-03-8-2C-50-H3-DS_MEGA	3	8	50	3	2
FTRMD-04-10-2C-50-H4-DS_MEGA	4	10	50	4	2
FTRMD-05-13-2C-50-H5-DS_MEGA	5	13	50	5	2
FTRMD-06-15-2C-50-H6-DS_MEGA	6	15	50	6	2
FTRMD-08-20-2C-60-H8-DS_MEGA	8	20	60	8	2
FTRMD-10-25-2C-75-H10-DS_MEGA	10	25	75	10	2
FTRMD-12-30-2C-75-H12-DS_MEGA	12	30	75	12	2
FTRMD-14-45-2C-100-H14-DS_MEGA	14	45	100	14	2
FTRMD-16-45-2C-100-H16-DS_MEGA	16	45	100	16	2
FTRMD-20-45-2C-100-H20-DS_MEGA	20	45	100	20	2
FTRMD-25-45-2C-100-H25-DS_MEGA	25	45	100	25	2

CÓDIGO DSDRILL	D	L1	L2	d	C
FTRMD-03-12-2C-75-H3-DS_MEGA	3	12	75	3	2
FTRMD-04-12-2C-75-H4-DS_MEGA	4	12	75	4	2
FTRMD-05-15-2C-75-H5-DS_MEGA	5	15	75	5	2
FTRMD-06-15-2C-100-H6-DS_MEGA	6	15	100	6	2
FTRMD-08-20-2C-100-H8-DS_MEGA	8	20	100	8	2
FTRMD-10-25-2C-100-H10-DS_MEGA	10	25	100	10	2
FTRMD-12-30-2C-100-H12-DS_MEGA	12	30	100	12	2
FTRMD-14-45-2C-125-H14-DS_MEGA	14	45	125	14	2
FTRMD-16-45-2C-125-H16-DS_MEGA	16	45	125	16	2
FTRMD-20-45-2C-125-H20-DS_MEGA	20	45	125	20	2
FTRMD-25-45-2C-125-H25-DS_MEGA	25	45	125	25	2

DS_MEGA

Topo Toroidal Raio 0,5mm

Ø 3-25 | 4C | AlTiN TiSiXN | 38° | Passo Dif. | R0.5

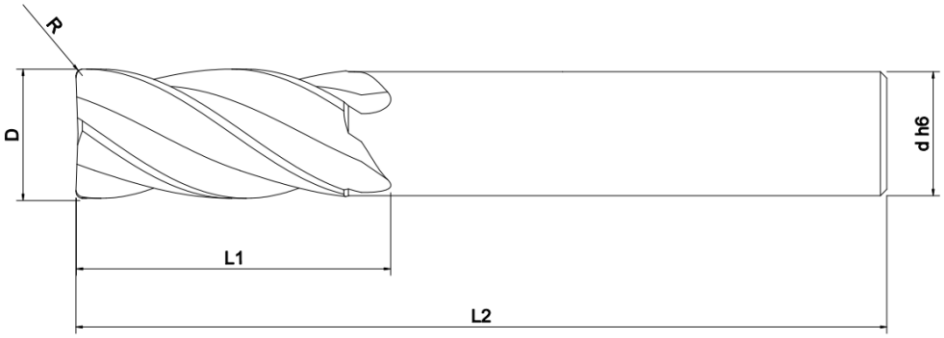

CÓDIGO DSDRILL	D	L1	L2	d	C	R
FTTMD-03-R0.5-8-4C-50-H3-DS_MEGA	3	8	50	3	4	0.5
FTTMD-04-R0.5-10-4C-50-H4-DS_MEGA	4	10	50	4	4	0.5
FTTMD-05-R0.5-13-4C-50-H5-DS_MEGA	5	13	50	5	4	0.5
FTTMD-06-R0.5-15-4C-50-H6-DS_MEGA	6	15	50	6	4	0.5
FTTMD-08-R0.5-20-4C-60-H8-DS_MEGA	8	20	60	8	4	0.5
FTTMD-10-R0.5-25-4C-75-H10-DS_MEGA	10	25	75	10	4	0.5
FTTMD-12-R0.5-30-4C-75-H12-DS_MEGA	12	30	75	12	4	0.5
FTTMD-14-R0.5-45-4C-100-H14-DS_MEGA	14	45	100	14	4	0.5
FTTMD-16-R0.5-45-4C-100-H16-DS_MEGA	16	45	100	16	4	0.5
FTTMD-20-R0.5-45-4C-100-H20-DS_MEGA	20	45	100	20	4	0.5
FTTMD-25-R0.5-45-4C-100-H25-DS_MEGA	25	45	100	25	4	0.5

CÓDIGO DSDRILL	D	L1	L2	d	C	R
FTTMD-03-R0.5-12-4C-75-H3-DS_MEGA	3	12	75	3	4	0.5
FTTMD-04-R0.5-12-4C-75-H4-DS_MEGA	4	12	75	4	4	0.5
FTTMD-05-R0.5-15-4C-75-H5-DS_MEGA	5	15	75	5	4	0.5
FTTMD-06-R0.5-15-4C-100-H6-DS_MEGA	6	15	100	6	4	0.5
FTTMD-08-R0.5-20-4C-100-H8-DS_MEGA	8	20	100	8	4	0.5
FTTMD-10-R0.5-25-4C-100-H10-DS_MEGA	10	25	100	10	4	0.5
FTTMD-12-R0.5-30-4C-100-H12-DS_MEGA	12	30	100	12	4	0.5
FTTMD-14-R0.5-45-4C-125-H14-DS_MEGA	14	45	125	14	4	0.5
FTTMD-16-R0.5-45-4C-125-H16-DS_MEGA	16	45	125	16	4	0.5
FTTMD-20-R0.5-45-4C-125-H20-DS_MEGA	20	45	125	20	4	0.5
FTTMD-25-R0.5-45-4C-125-H25-DS_MEGA	25	45	125	25	4	0.5

Topo Toroidal Raio 1,0mm

Ø 8-25 | 4C | AlTiN TiSiXN | 38° | Passo Dif. | R1.0

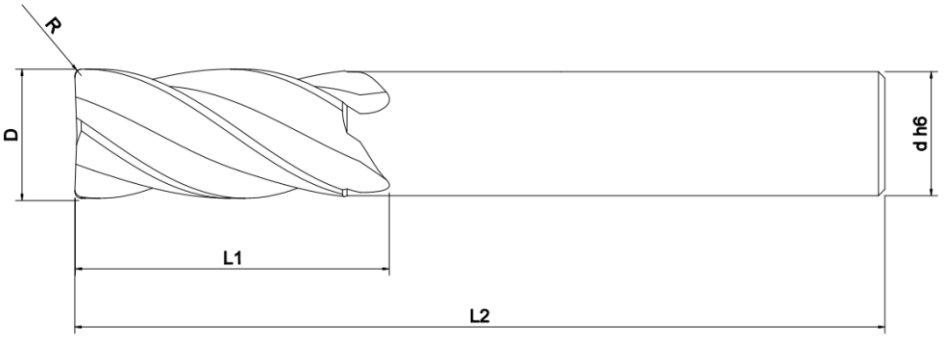

CÓDIGO DSDRILL	D	L1	L2	d	C	R
FTTMD-08-R1-20-4C-60-H8-DS_MEGA	8	20	60	8	4	1
FTTMD-10-R1-25-4C-75-H10-DS_MEGA	10	25	75	10	4	1
FTTMD-12-R1-30-4C-75-H12-DS_MEGA	12	30	75	12	4	1
FTTMD-14-R1-45-4C-100-H14-DS_MEGA	14	45	100	14	4	1
FTTMD-16-R1-45-4C-100-H16-DS_MEGA	16	45	100	16	4	1
FTTMD-20-R1-45-4C-100-H20-DS_MEGA	20	45	100	20	4	1
FTTMD-25-R1-45-4C-100-H25-DS_MEGA	25	45	100	25	4	1

CÓDIGO DSDRILL	D	L1	L2	d	C	R
FTTMD-08-R1-20-4C-100-H8-DS_MEGA	8	20	100	8	4	1
FTTMD-10-R1-25-4C-100-H10-DS_MEGA	10	25	100	10	4	1
FTTMD-12-R1-30-4C-100-H12-DS_MEGA	12	30	100	12	4	1
FTTMD-14-R1-45-4C-125-H14-DS_MEGA	14	45	125	14	4	1
FTTMD-16-R1-45-4C-125-H16-DS_MEGA	16	45	125	16	4	1
FTTMD-20-R1-45-4C-125-H20-DS_MEGA	20	45	125	20	4	1
FTTMD-25-R1-45-4C-125-H25-DS_MEGA	25	45	125	25	4	1

DS_MEGA

Topo Esférico

Ø 3-20 | 2C | AlTiN TiSiXN | 38°

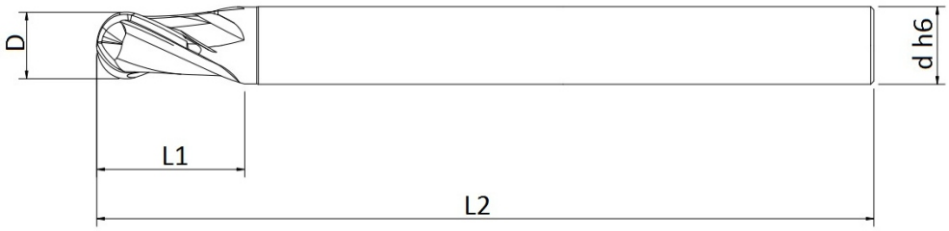

CÓDIGO DSDRILL	D	L1	L2	d	C
FTEMD-03-6-2C-50-H3-DS_MEGA	3	6	50	3	2
FTEMD-04-8-2C-50-H4-DS_MEGA	4	8	50	4	2
FTEMD-05-10-2C-50-H5-DS_MEGA	5	10	50	5	2
FTEMD-06-12-2C-50-H6-DS_MEGA	6	12	50	6	2
FTEMD-08-16-2C-60-H8-DS_MEGA	8	16	60	8	2
FTEMD-10-20-2C-75-H10-DS_MEGA	10	20	75	10	2
FTEMD-12-25-2C-75-H12-DS_MEGA	12	25	75	12	2
FTEMD-14-30-2C-75-H14-DS_MEGA	14	30	75	14	2
FTEMD-16-30-2C-75-H16-DS_MEGA	16	30	75	16	2
FTEMD-20-40-2C-100-H20-DS_MEGA	20	40	100	20	2

CÓDIGO DSDRILL	D	L1	L2	d	C
FTEMD-03-6-2C-75-H3-DS_MEGA	3	6	75	3	2
FTEMD-04-8-2C-75-H4-DS_MEGA	4	8	75	4	2
FTEMD-05-10-2C-75-H5-DS_MEGA	5	10	75	5	2
FTEMD-06-12-2C-100-H6-DS_MEGA	6	12	100	6	2
FTEMD-08-16-2C-100-H8-DS_MEGA	8	16	100	8	2
FTEMD-10-20-2C-100-H10-DS_MEGA	10	20	100	10	2
FTEMD-12-25-2C-100-H12-DS_MEGA	12	25	100	12	2
FTEMD-14-30-2C-110-H14-DS_MEGA	14	30	110	14	2
FTEMD-16-30-2C-110-H16-DS_MEGA	16	30	110	16	2
FTEMD-20-40-2C-125-H20-DS_MEGA	20	40	125	20	2

Topo Esférico

Ø 3-20 | 4C | AlTiN TiSiXN | 38°

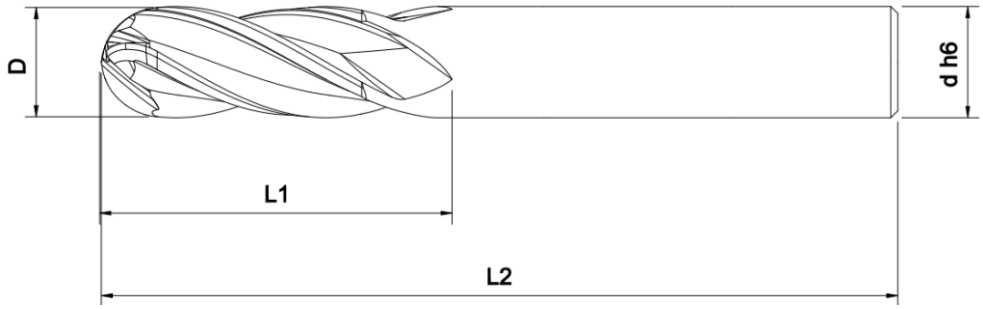

CÓDIGO DSDRILL	D	L1	L2	d	C
FTEMD-03-6-4C-50-H3-DS_MEGA	3	6	50	3	4
FTEMD-04-8-4C-50-H4-DS_MEGA	4	8	50	4	4
FTEMD-05-10-4C-50-H5-DS_MEGA	5	10	50	5	4
FTEMD-06-12-4C-50-H6-DS_MEGA	6	12	50	6	4
FTEMD-08-16-4C-60-H8-DS_MEGA	8	16	60	8	4
FTEMD-10-20-4C-75-H10-DS_MEGA	10	20	75	10	4
FTEMD-12-25-4C-75-H12-DS_MEGA	12	25	75	12	4
FTEMD-14-30-4C-75-H14-DS_MEGA	14	30	75	14	4
FTEMD-16-30-4C-75-H16-DS_MEGA	16	30	75	16	4
FTEMD-20-40-4C-100-H20-DS_MEGA	20	40	100	20	4

CÓDIGO DSDRILL	D	L1	L2	d	C
FTEMD-03-6-4C-75-H3-DS_MEGA	3	6	75	3	4
FTEMD-04-8-4C-75-H4-DS_MEGA	4	8	75	4	4
FTEMD-05-10-4C-75-H5-DS_MEGA	5	10	75	5	4
FTEMD-06-12-4C-100-H6-DS_MEGA	6	12	100	6	4
FTEMD-08-16-4C-100-H8-DS_MEGA	8	16	100	8	4
FTEMD-10-20-4C-100-H10-DS_MEGA	10	20	100	10	4
FTEMD-12-25-4C-100-H12-DS_MEGA	12	25	100	12	4
FTEMD-14-30-4C-110-H14-DS_MEGA	14	30	110	14	4
FTEMD-16-30-4C-110-H16-DS_MEGA	16	30	110	16	4
FTEMD-20-40-4C-125-H20-DS_MEGA	20	40	125	20	4

Referência de Dados de Corte - Linha DS_MEGA

P	M	K	N	S	H
●	●				○

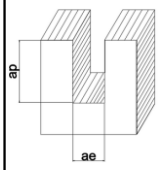

MATERIAL	DUREZA	VC (m/min)	D 3	4	5	6	8	10	12	14	16	20	25
			fz² (mm/z)										
1.2083	52 HRC	60	0.008	0.010	0.012	0.014	0.018	0.024	0.028	0.032	0.036	0.040	0.046
1.2162	52 HRC	70	0.008	0.010	0.012	0.014	0.018	0.024	0.028	0.032	0.036	0.040	0.046
1.2343	52 HRC	70	0.008	0.010	0.012	0.014	0.018	0.024	0.028	0.032	0.036	0.040	0.046
1.2379	60 HRC	-	-	-	-	-	-	-	-	-	-	-	-
1.2714HH	43 HRC	60	0.012	0.016	0.018	0.020	0.025	0.030	0.035	0.040	0.045	0.055	0.070
1.2767	52 HRC	70	0.008	0.010	0.012	0.014	0.018	0.024	0.028	0.032	0.036	0.040	0.046
1.2842	60 HRC	-	-	-	-	-	-	-	-	-	-	-	-
Steel	1400 N/mm²	60	0.012	0.016	0.018	0.020	0.025	0.030	0.035	0.040	0.045	0.055	0.070

ae = 1 x D

ap = 1 x D

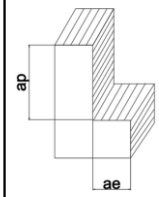

MATERIAL	DUREZA	VC (m/min)	D 3	4	5	6	8	10	12	14	16	20	25
			fz² (mm/z)										
1.2083	52 HRC	90	0.012	0.014	0.018	0.022	0.030	0.039	0.047	0.050	0.055	0.066	0.080
1.2162	52 HRC	110	0.012	0.014	0.018	0.022	0.030	0.039	0.047	0.050	0.055	0.066	0.080
1.2343	52 HRC	110	0.012	0.014	0.018	0.022	0.030	0.039	0.047	0.050	0.055	0.066	0.080
1.2379	60 HRC	-	-	-	-	-	-	-	-	-	-	-	-
1.2714HH	43 HRC	90	0.015	0.018	0.020	0.025	0.034	0.042	0.050	0.056	0.060	0.070	0.085
1.2767	52 HRC	110	0.012	0.014	0.018	0.022	0.030	0.039	0.047	0.050	0.055	0.066	0.080
1.2842	60 HRC	-	-	-	-	-	-	-	-	-	-	-	-
Steel	1400 N/mm²	90	0.015	0.018	0.020	0.025	0.034	0.042	0.050	0.056	0.060	0.070	0.085

ae = 0.5 x D

ap = 1 x D

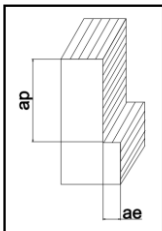

MATERIAL	DUREZA	VC (m/min)	D 3	4	5	6	8	10	12	14	16	20	25
			fz² (mm/z)										
1.2083	52 HRC	100	0.010	0.012	0.015	0.018	0.024	0.033	0.039	0.044	0.048	0.057	0.070
1.2162	52 HRC	140	0.010	0.012	0.015	0.018	0.024	0.033	0.039	0.044	0.048	0.057	0.070
1.2343	52 HRC	140	0.010	0.012	0.015	0.018	0.024	0.033	0.039	0.044	0.048	0.057	0.070
1.2379	60 HRC	100	0.008	0.010	0.012	0.015	0.025	0.030	0.035	0.040	0.045	0.060	0.075
1.2714HH	43 HRC	130	0.013	0.015	0.020	0.025	0.035	0.045	0.055	0.060	0.065	0.075	0.090
1.2767	52 HRC	140	0.010	0.012	0.015	0.018	0.024	0.033	0.039	0.044	0.048	0.057	0.070
1.2842	60 HRC	110	0.008	0.010	0.012	0.015	0.025	0.030	0.035	0.040	0.045	0.060	0.075
Steel	1400 N/mm²	130	0.013	0.015	0.020	0.025	0.035	0.045	0.055	0.060	0.065	0.075	0.090

ae = 0.05 x D

ap = 1.5 x D

DS_POWER

Topo Reto

Ø 3-25 | 4C | AlCrN | 30°

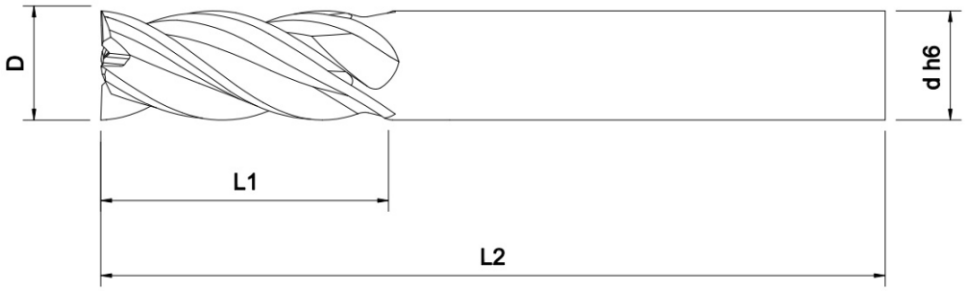

CÓDIGO DSDRILL	D	L1	L2	d	C
FTRMD-03-8-4C-50-H3-DS_POWER	3	8	50	3	4
FTRMD-04-10-4C-50-H4-DS_POWER	4	10	50	4	4
FTRMD-05-13-4C-50-H5-DS_POWER	5	13	50	5	4
FTRMD-06-15-4C-50-H6-DS_POWER	6	15	50	6	4
FTRMD-08-20-4C-60-H8-DS_POWER	8	20	60	8	4
FTRMD-10-25-4C-75-H10-DS_POWER	10	25	75	10	4
FTRMD-12-30-4C-75-H12-DS_POWER	12	30	75	12	4
FTRMD-14-45-4C-100-H14-DS_POWER	14	45	100	14	4
FTRMD-16-45-4C-100-H16-DS_POWER	16	45	100	16	4
FTRMD-20-45-4C-100-H20-DS_POWER	20	45	100	20	4
FTRMD-25-45-4C-100-H25-DS_POWER	25	45	100	25	4

CÓDIGO DSDRILL	D	L1	L2	d	C
FTRMD-03-12-4C-75-H3-DS_POWER	3	12	75	3	4
FTRMD-04-12-4C-75-H4-DS_POWER	4	12	75	4	4
FTRMD-05-15-4C-75-H5-DS_POWER	5	15	75	5	4
FTRMD-06-15-4C-100-H6-DS_POWER	6	15	100	6	4
FTRMD-08-20-4C-100-H8-DS_POWER	8	20	100	8	4
FTRMD-10-25-4C-100-H10-DS_POWER	10	25	100	10	4
FTRMD-12-30-4C-100-H12-DS_POWER	12	30	100	12	4
FTRMD-14-45-4C-125-H14-DS_POWER	14	45	125	14	4
FTRMD-16-45-4C-125-H16-DS_POWER	16	45	125	16	4
FTRMD-20-45-4C-125-H20-DS_POWER	20	45	125	20	4
FTRMD-25-45-4C-125-H25-DS_POWER	25	45	125	25	4

Topo Reto

Ø 3-25 | 2C | AlCrN | 30°

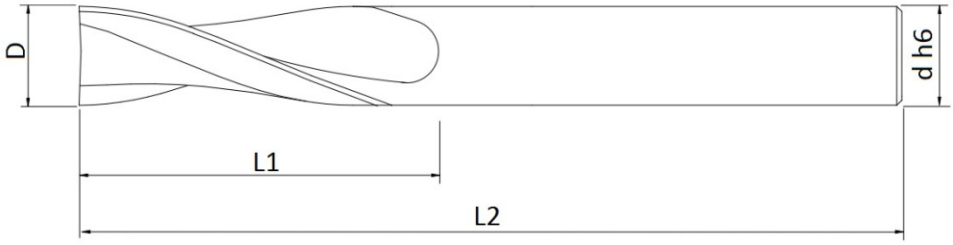

CÓDIGO DSDRILL	D	L1	L2	d	C
FTRMD-03-8-2C-50-H3-DS_POWER	3	8	50	3	2
FTRMD-04-10-2C-50-H4-DS_POWER	4	10	50	4	2
FTRMD-05-13-2C-50-H5-DS_POWER	5	13	50	5	2
FTRMD-06-15-2C-50-H6-DS_POWER	6	15	50	6	2
FTRMD-08-20-2C-60-H8-DS_POWER	8	20	60	8	2
FTRMD-10-25-2C-75-H10-DS_POWER	10	25	75	10	2
FTRMD-12-30-2C-75-H12-DS_POWER	12	30	75	12	2
FTRMD-14-45-2C-100-H14-DS_POWER	14	45	100	14	2
FTRMD-16-45-2C-100-H16-DS_POWER	16	45	100	16	2
FTRMD-20-45-2C-100-H20-DS_POWER	20	45	100	20	2
FTRMD-25-45-2C-100-H25-DS_POWER	25	45	100	25	2

CÓDIGO DSDRILL	D	L1	L2	d	C
FTRMD-03-12-2C-75-H3-DS_POWER	3	12	75	3	2
FTRMD-04-12-2C-75-H4-DS_POWER	4	12	75	4	2
FTRMD-05-15-2C-75-H5-DS_POWER	5	15	75	5	2
FTRMD-06-15-2C-100-H6-DS_POWER	6	15	100	6	2
FTRMD-08-20-2C-100-H8-DS_POWER	8	20	100	8	2
FTRMD-10-25-2C-100-H10-DS_POWER	10	25	100	10	2
FTRMD-12-30-2C-100-H12-DS_POWER	12	30	100	12	2
FTRMD-14-45-2C-125-H14-DS_POWER	14	45	125	14	2
FTRMD-16-45-2C-125-H16-DS_POWER	16	45	125	16	2
FTRMD-20-45-2C-125-H20-DS_POWER	20	45	125	20	2
FTRMD-25-45-2C-125-H25-DS_POWER	25	45	125	25	2

DS_POWER

Topo Toroidal Raio 0,5mm

Ø 3-25 | 4C | AlCrN | 30° | R0.5

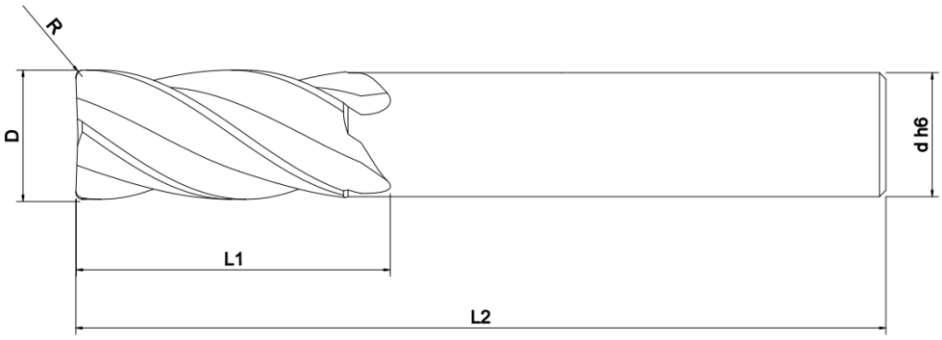

CÓDIGO DSDRILL	D	L1	L2	d	C	R
FTTMD-03-R0.5-8-4C-50-H3-DS_POWER	3	8	50	3	4	0.5
FTTMD-04-R0.5-10-4C-50-H4-DS_POWER	4	10	50	4	4	0.5
FTTMD-05-R0.5-13-4C-50-H5-DS_POWER	5	13	50	5	4	0.5
FTTMD-06-R0.5-15-4C-50-H6-DS_POWER	6	15	50	6	4	0.5
FTTMD-08-R0.5-20-4C-60-H8-DS_POWER	8	20	60	8	4	0.5
FTTMD-10-R0.5-25-4C-75-H10-DS_POWER	10	25	75	10	4	0.5
FTTMD-12-R0.5-30-4C-75-H12-DS_POWER	12	30	75	12	4	0.5
FTTMD-14-R0.5-45-4C-100-H14-DS_POWER	14	45	100	14	4	0.5
FTTMD-16-R0.5-45-4C-100-H16-DS_POWER	16	45	100	16	4	0.5
FTTMD-20-R0.5-45-4C-100-H20-DS_POWER	20	45	100	20	4	0.5
FTTMD-25-R0.5-45-4C-100-H25-DS_POWER	25	45	100	25	4	0.5

CÓDIGO DSDRILL	D	L1	L2	d	C	R
FTTMD-03-R0.5-12-4C-75-H3-DS_POWER	3	12	75	3	4	0.5
FTTMD-04-R0.5-12-4C-75-H4-DS_POWER	4	12	75	4	4	0.5
FTTMD-05-R0.5-15-4C-75-H5-DS_POWER	5	15	75	5	4	0.5
FTTMD-06-R0.5-15-4C-100-H6-DS_POWER	6	15	100	6	4	0.5
FTTMD-08-R0.5-20-4C-100-H8-DS_POWER	8	20	100	8	4	0.5
FTTMD-10-R0.5-25-4C-100-H10-DS_POWER	10	25	100	10	4	0.5
FTTMD-12-R0.5-30-4C-100-H12-DS_POWER	12	30	100	12	4	0.5
FTTMD-14-R0.5-45-4C-125-H14-DS_POWER	14	45	125	14	4	0.5
FTTMD-16-R0.5-45-4C-125-H16-DS_POWER	16	45	125	16	4	0.5
FTTMD-20-R0.5-45-4C-125-H20-DS_POWER	20	45	125	20	4	0.5
FTTMD-25-R0.5-45-4C-125-H25-DS_POWER	25	45	125	25	4	0.5

Topo Toroidal Raio 1,0mm

Ø 8-25 | 4C | AlCrN | 30° | R1.0

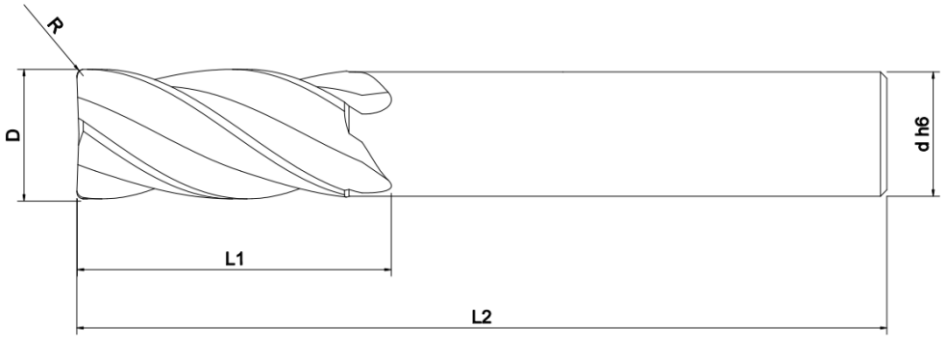

CÓDIGO DSDRILL	D	L1	L2	d	C	R
FTTMD-08-R1-20-4C-60-H8-DS_POWER	8	20	60	8	4	1
FTTMD-10-R1-25-4C-75-H10-DS_POWER	10	25	75	10	4	1
FTTMD-12-R1-30-4C-75-H12-DS_POWER	12	30	75	12	4	1
FTTMD-14-R1-45-4C-100-H14-DS_POWER	14	45	100	14	4	1
FTTMD-16-R1-45-4C-100-H16-DS_POWER	16	45	100	16	4	1
FTTMD-20-R1-45-4C-100-H20-DS_POWER	20	45	100	20	4	1
FTTMD-25-R1-45-4C-100-H25-DS_POWER	25	45	100	25	4	1

CÓDIGO DSDRILL	D	L1	L2	d	C	R
FTTMD-08-R1-20-4C-100-H8-DS_POWER	8	20	100	8	4	1
FTTMD-10-R1-25-4C-100-H10-DS_POWER	10	25	100	10	4	1
FTTMD-12-R1-30-4C-100-H12-DS_POWER	12	30	100	12	4	1
FTTMD-14-R1-45-4C-125-H14-DS_POWER	14	45	125	14	4	1
FTTMD-16-R1-45-4C-125-H16-DS_POWER	16	45	125	16	4	1
FTTMD-20-R1-45-4C-125-H20-DS_POWER	20	45	125	20	4	1
FTTMD-25-R1-45-4C-125-H25-DS_POWER	25	45	125	25	4	1

DS_POWER

Topo Esférico

Ø 3-20 | 2C | AlCrN | 30°

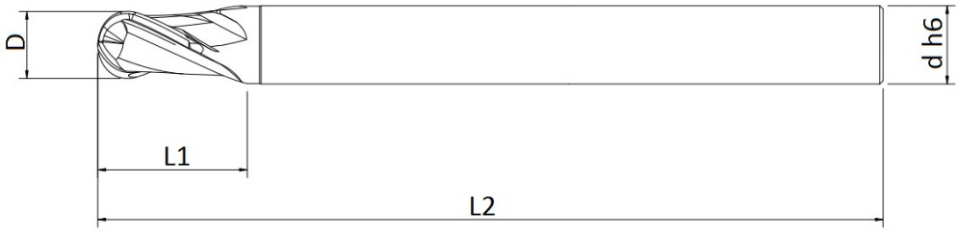

CÓDIGO DSDRILL	D	L1	L2	d	C
FTEMD-03-6-2C-50-H3-DS_POWER	3	6	50	3	2
FTEMD-04-8-2C-50-H4-DS_POWER	4	8	50	4	2
FTEMD-05-10-2C-50-H5-DS_POWER	5	10	50	5	2
FTEMD-06-12-2C-50-H6-DS_POWER	6	12	50	6	2
FTEMD-08-16-2C-60-H8-DS_POWER	8	16	60	8	2
FTEMD-10-20-2C-75-H10-DS_POWER	10	20	75	10	2
FTEMD-12-25-2C-75-H12-DS_POWER	12	25	75	12	2
FTEMD-14-30-2C-75-H14-DS_POWER	14	30	75	14	2
FTEMD-16-30-2C-75-H16-DS_POWER	16	30	75	16	2
FTEMD-20-40-2C-100-H20-DS_POWER	20	40	100	20	2

CÓDIGO DSDRILL	D	L1	L2	d	C
FTEMD-03-6-2C-75-H3-DS_POWER	3	6	75	3	2
FTEMD-04-8-2C-75-H4-DS_POWER	4	8	75	4	2
FTEMD-05-10-2C-75-H5-DS_POWER	5	10	75	5	2
FTEMD-06-12-2C-100-H6-DS_POWER	6	12	100	6	2
FTEMD-08-16-2C-100-H8-DS_POWER	8	16	100	8	2
FTEMD-10-20-2C-100-H10-DS_POWER	10	20	100	10	2
FTEMD-12-25-2C-100-H12-DS_POWER	12	25	100	12	2
FTEMD-14-30-2C-110-H14-DS_POWER	14	30	110	14	2
FTEMD-16-30-2C-110-H16-DS_POWER	16	30	110	16	2
FTEMD-20-40-2C-125-H20-DS_POWER	20	40	125	20	2

Topo Esférico

Ø 3-20 | 4C | AlCrN | 30°

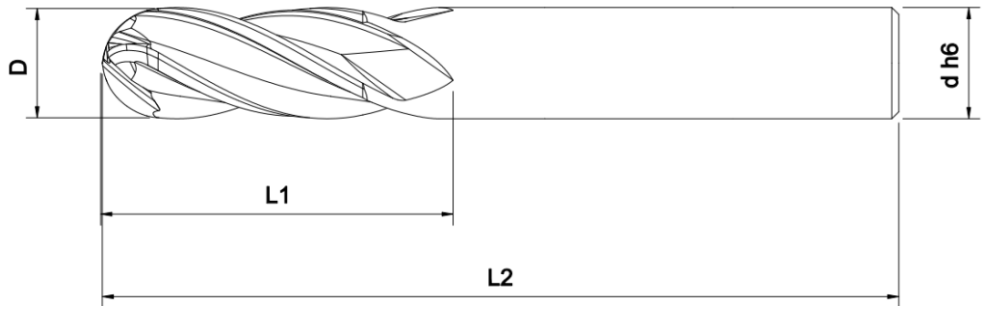

CÓDIGO DSDRILL	D	L1	L2	d	C
FTEMD-03-6-4C-50-H3-DS_POWER	3	6	50	3	4
FTEMD-04-8-4C-50-H4-DS_POWER	4	8	50	4	4
FTEMD-05-10-4C-50-H5-DS_POWER	5	10	50	5	4
FTEMD-06-12-4C-50-H6-DS_POWER	6	12	50	6	4
FTEMD-08-16-4C-60-H8-DS_POWER	8	16	60	8	4
FTEMD-10-20-4C-75-H10-DS_POWER	10	20	75	10	4
FTEMD-12-25-4C-75-H12-DS_POWER	12	25	75	12	4
FTEMD-14-30-4C-75-H14-DS_POWER	14	30	75	14	4
FTEMD-16-30-4C-75-H16-DS_POWER	16	30	75	16	4
FTEMD-20-40-4C-100-H20-DS_POWER	20	40	100	20	4

CÓDIGO DSDRILL	D	L1	L2	d	C
FTEMD-03-6-4C-75-H3-DS_POWER	3	6	75	3	4
FTEMD-04-8-4C-75-H4-DS_POWER	4	8	75	4	4
FTEMD-05-10-4C-75-H5-DS_POWER	5	10	75	5	4
FTEMD-06-12-4C-100-H6-DS_POWER	6	12	100	6	4
FTEMD-08-16-4C-100-H8-DS_POWER	8	16	100	8	4
FTEMD-10-20-4C-100-H10-DS_POWER	10	20	100	10	4
FTEMD-12-25-4C-100-H12-DS_POWER	12	25	100	12	4
FTEMD-14-30-4C-110-H14-DS_POWER	14	30	110	14	4
FTEMD-16-30-4C-110-H16-DS_POWER	16	30	110	16	4
FTEMD-20-40-4C-125-H20-DS_POWER	20	40	125	20	4

Referência de Dados de Corte - Linha DS_POWER

P	M	K	N	S	H
●				○	●

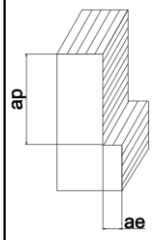

MATERIAL	DUREZA	VC (m/min)	D										
			3	4	5	6	8	10	12	14	16	20	25
			fz² (mm/z)										
1.2083	52 HRC	80	0.007	0.009	0.01	0.012	0.015	0.02	0.025	0.028	0.032	0.04	0.05
1.2162	52 HRC	120	0.007	0.009	0.01	0.012	0.015	0.02	0.025	0.028	0.032	0.04	0.05
1.2343	52 HRC	120	0.007	0.009	0.01	0.012	0.015	0.02	0.025	0.028	0.032	0.04	0.05
1.2379	60 HRC	75	0.007	0.009	0.01	0.012	0.015	0.02	0.025	0.028	0.032	0.04	0.05
1.2767	52 HRC	75	0.007	0.009	0.01	0.012	0.015	0.02	0.025	0.028	0.032	0.04	0.05
1.2842	60 HRC	70	0.007	0.009	0.01	0.012	0.015	0.02	0.025	0.028	0.032	0.04	0.05
1.2714HH	43 HRC	130	0.007	0.009	0.01	0.012	0.015	0.02	0.025	0.028	0.032	0.04	0.05
1.3343	64 HRC	55	0.007	0.009	0.01	0.012	0.015	0.02	0.025	0.028	0.032	0.04	0.05
1.3344 PM	64 HRC	55	0.007	0.009	0.01	0.012	0.015	0.02	0.025	0.028	0.032	0.04	0.05
ae = 0.04 x D	M V10 PM	62 HRC	60	0.007	0.009	0.01	0.012	0.015	0.02	0.025	0.028	0.032	0.04	0.05
ap = 3 x D	M W10 PM	65 HRC	55	0.007	0.009	0.01	0.012	0.015	0.02	0.025	0.028	0.032	0.04	0.05

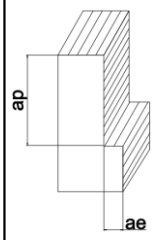

MATERIAL	DUREZA	VC (m/min)	D										
			3	4	5	6	8	10	12	14	16	20	25
			fz² (mm/z)										
1.2083	52 HRC	80	0.009	0.011	0.013	0.015	0.018	0.022	0.028	0.032	0.035	0.042	0.052
1.2162	52 HRC	120	0.009	0.011	0.013	0.015	0.018	0.022	0.028	0.032	0.035	0.042	0.052
1.2343	52 HRC	120	0.009	0.011	0.013	0.015	0.018	0.022	0.028	0.032	0.035	0.042	0.052
1.2379	60 HRC	75	0.009	0.011	0.013	0.015	0.018	0.022	0.028	0.032	0.035	0.042	0.052
1.2767	52 HRC	75	0.009	0.011	0.013	0.015	0.018	0.022	0.028	0.032	0.035	0.042	0.052
1.2842	60 HRC	70	0.009	0.011	0.013	0.015	0.018	0.022	0.028	0.032	0.035	0.042	0.052
1.2714HH	43 HRC	130	0.009	0.011	0.013	0.015	0.018	0.022	0.028	0.032	0.035	0.042	0.052
1.3343	64 HRC	55	0.009	0.011	0.013	0.015	0.018	0.022	0.028	0.032	0.035	0.042	0.052
1.3344 PM	64 HRC	55	0.009	0.011	0.013	0.015	0.018	0.022	0.028	0.032	0.035	0.042	0.052
ae = 0.04 x D	M V10 PM	62 HRC	60	0.009	0.011	0.013	0.015	0.018	0.022	0.028	0.032	0.035	0.042	0.052
ap = 2 x D	M W10 PM	65 HRC	55	0.009	0.011	0.013	0.015	0.018	0.022	0.028	0.032	0.035	0.042	0.052

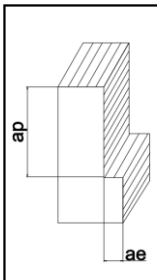

MATERIAL	DUREZA	VC (m/min)	D										
			3	4	5	6	8	10	12	14	16	20	25
			fz² (mm/z)										
1.2083	52 HRC	80	0.01	0.012	0.015	0.017	0.02	0.025	0.03	0.035	0.038	0.46	0.055
1.2162	52 HRC	120	0.01	0.012	0.015	0.017	0.02	0.025	0.03	0.035	0.038	0.46	0.055
1.2343	52 HRC	120	0.01	0.012	0.015	0.017	0.02	0.025	0.03	0.035	0.038	0.46	0.055
1.2379	60 HRC	75	0.01	0.012	0.015	0.017	0.02	0.025	0.03	0.035	0.038	0.46	0.055
1.2767	52 HRC	75	0.01	0.012	0.015	0.017	0.02	0.025	0.03	0.035	0.038	0.46	0.055
1.2842	60 HRC	70	0.01	0.012	0.015	0.017	0.02	0.025	0.03	0.035	0.038	0.46	0.055
1.2714HH	43 HRC	130	0.01	0.012	0.015	0.017	0.02	0.025	0.03	0.035	0.038	0.46	0.055
1.3343	64 HRC	55	0.01	0.012	0.015	0.017	0.02	0.025	0.03	0.035	0.038	0.46	0.055
1.3344 PM	64 HRC	55	0.01	0.012	0.015	0.017	0.02	0.025	0.03	0.035	0.038	0.46	0.055
ae = 0.04 x D	M V10 PM	62 HRC	60	0.01	0.012	0.015	0.017	0.02	0.025	0.03	0.035	0.038	0.46	0.055
ap = 1.5 x D	M W10 PM	65 HRC	55	0.01	0.012	0.015	0.017	0.02	0.025	0.03	0.035	0.038	0.46	0.055

DS_ALUM

Topo Reto

Ø 3-25 | 3C | 45°

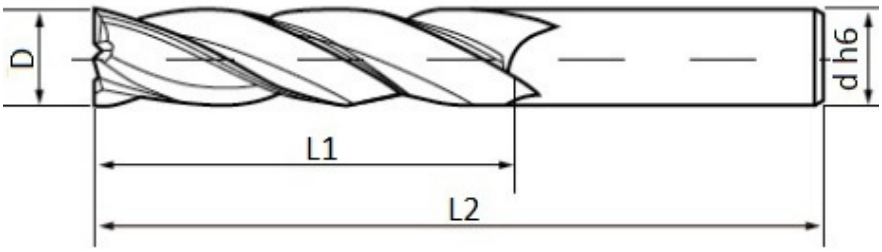

CÓDIGO DSDRILL	D	L1	L2	d	C
FTRMD-03-8-3C-50-H3-DS_ALUM	3	8	50	3	3
FTRMD-04-10-3C-50-H4-DS_ALUM	4	10	50	4	3
FTRMD-05-13-3C-50-H5-DS_ALUM	5	13	50	5	3
FTRMD-06-15-3C-50-H6-DS_ALUM	6	15	50	6	3
FTRMD-08-20-3C-60-H8-DS_ALUM	8	20	60	8	3
FTRMD-10-25-3C-75-H10-DS_ALUM	10	25	75	10	3
FTRMD-12-30-3C-75-H12-DS_ALUM	12	30	75	12	3
FTRMD-14-45-3C-100-H14-DS_ALUM	14	45	100	14	3
FTRMD-16-45-3C-100-H16-DS_ALUM	16	45	100	16	3
FTRMD-20-45-3C-100-H20-DS_ALUM	20	45	100	20	3
FTRMD-25-45-3C-100-H25-DS_ALUM	25	45	100	25	3

CÓDIGO DSDRILL	D	L1	L2	d	C
FTRMD-03-12-3C-75-H3-DS_ALUM	3	12	75	3	3
FTRMD-04-12-3C-75-H4-DS_ALUM	4	12	75	4	3
FTRMD-05-15-3C-75-H5-DS_ALUM	5	15	75	5	3
FTRMD-06-15-3C-100-H6-DS_ALUM	6	15	100	6	3
FTRMD-08-20-3C-100-H8-DS_ALUM	8	20	100	8	3
FTRMD-10-25-3C-100-H10-DS_ALUM	10	25	100	10	3
FTRMD-12-30-3C-100-H12-DS_ALUM	12	30	100	12	3
FTRMD-14-45-3C-125-H14-DS_ALUM	14	45	125	14	3
FTRMD-16-45-3C-125-H16-DS_ALUM	16	45	125	16	3
FTRMD-20-45-3C-125-H20-DS_ALUM	20	45	125	20	3
FTRMD-25-45-3C-125-H25-DS_ALUM	25	45	125	25	3

Topo Reto

Ø 3-25 | 2C | 45°

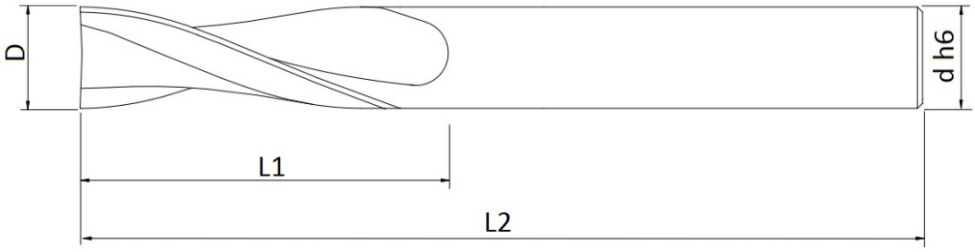

CÓDIGO DSDRILL	D	L1	L2	d	C
FTRMD-03-8-2C-50-H3-DS_ALUM	3	8	50	3	2
FTRMD-04-10-2C-50-H4-DS_ALUM	4	10	50	4	2
FTRMD-05-13-2C-50-H5-DS_ALUM	5	13	50	5	2
FTRMD-06-15-2C-50-H6-DS_ALUM	6	15	50	6	2
FTRMD-08-20-2C-60-H8-DS_ALUM	8	20	60	8	2
FTRMD-10-25-2C-75-H10-DS_ALUM	10	25	75	10	2
FTRMD-12-30-2C-75-H12-DS_ALUM	12	30	75	12	2
FTRMD-14-45-2C-100-H14-DS_ALUM	14	45	100	14	2
FTRMD-16-45-2C-100-H16-DS_ALUM	16	45	100	16	2
FTRMD-20-45-2C-100-H20-DS_ALUM	20	45	100	20	2
FTRMD-25-45-2C-100-H25-DS_ALUM	25	45	100	25	2

CÓDIGO DSDRILL	D	L1	L2	d	C
FTRMD-03-12-2C-75-H3-DS_ALUM	3	12	75	3	2
FTRMD-04-12-2C-75-H4-DS_ALUM	4	12	75	4	2
FTRMD-05-15-2C-75-H5-DS_ALUM	5	15	75	5	2
FTRMD-06-15-2C-100-H6-DS_ALUM	6	15	100	6	2
FTRMD-08-20-2C-100-H8-DS_ALUM	8	20	100	8	2
FTRMD-10-25-2C-100-H10-DS_ALUM	10	25	100	10	2
FTRMD-12-30-2C-100-H12-DS_ALUM	12	30	100	12	2
FTRMD-14-45-2C-125-H14-DS_ALUM	14	45	125	14	2
FTRMD-16-45-2C-125-H16-DS_ALUM	16	45	125	16	2
FTRMD-20-45-2C-125-H20-DS_ALUM	20	45	125	20	2
FTRMD-25-45-2C-125-H25-DS_ALUM	25	45	125	25	2

DS_ALUM

Topo Toroidal Raio 0,5mm

Ø 3-25 | 2C | 45° | R0.5

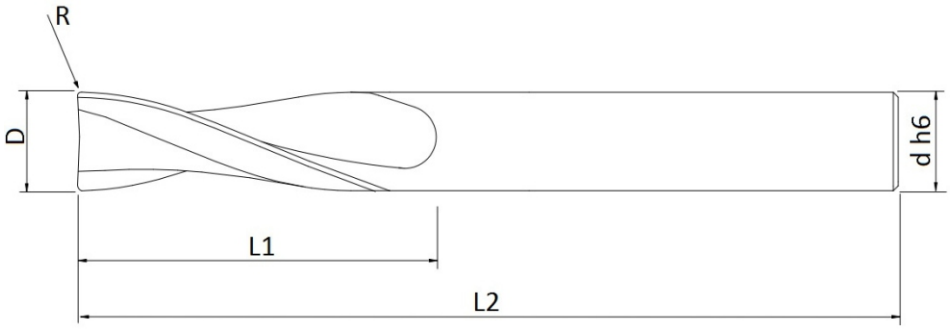

CÓDIGO DSDRILL	D	L1	L2	d	C	R
FTTMD-03-R0.5-8-2C-50-H3-DS_ALUM	3	8	50	3	2	0.5
FTTMD-04-R0.5-10-2C-50-H4-DS_ALUM	4	10	50	4	2	0.5
FTTMD-05-R0.5-13-2C-50-H5-DS_ALUM	5	13	50	5	2	0.5
FTTMD-06-R0.5-15-2C-50-H6-DS_ALUM	6	15	50	6	2	0.5
FTTMD-08-R0.5-20-2C-60-H8-DS_ALUM	8	20	60	8	2	0.5
FTTMD-10-R0.5-25-2C-75-H10-DS_ALUM	10	25	75	10	2	0.5
FTTMD-12-R0.5-30-2C-75-H12-DS_ALUM	12	30	75	12	2	0.5
FTTMD-14-R0.5-45-2C-100-H14-DS_ALUM	14	45	100	14	2	0.5
FTTMD-16-R0.5-45-2C-100-H16-DS_ALUM	16	45	100	16	2	0.5
FTTMD-20-R0.5-45-2C-100-H20-DS_ALUM	20	45	100	20	2	0.5
FTTMD-25-R0.5-45-2C-100-H25-DS_ALUM	25	45	100	25	2	0.5

CÓDIGO DSDRILL	D	L1	L2	d	C	R
FTTMD-03-R0.5-12-2C-75-H3-DS_POWER	3	12	75	3	2	0.5
FTTMD-04-R0.5-12-2C-75-H4-DS_POWER	4	12	75	4	2	0.5
FTTMD-05-R0.5-15-2C-75-H5-DS_POWER	5	15	75	5	2	0.5
FTTMD-06-R0.5-15-2C-100-H6-DS_POWER	6	15	100	6	2	0.5
FTTMD-08-R0.5-20-2C-100-H8-DS_POWER	8	20	100	8	2	0.5
FTTMD-10-R0.5-25-2C-100-H10-DS_POWER	10	25	100	10	2	0.5
FTTMD-12-R0.5-30-2C-100-H12-DS_POWER	12	30	100	12	2	0.5
FTTMD-14-R0.5-45-2C-125-H14-DS_POWER	14	45	125	14	2	0.5
FTTMD-16-R0.5-45-2C-125-H16-DS_POWER	16	45	125	16	2	0.5
FTTMD-20-R0.5-45-2C-125-H20-DS_POWER	20	45	125	20	2	0.5
FTTMD-25-R0.5-45-2C-125-H25-DS_POWER	25	45	125	25	2	0.5

Topo Toroidal Raio 1,0mm

Ø 8-25 | 2C | 45° | R1.0

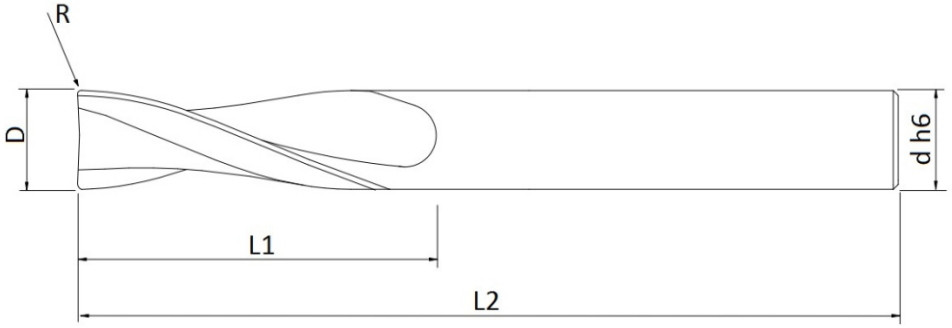

CÓDIGO DSDRILL	D	L1	L2	d	C	R
FTTMD-08-R1-20-2C-60-H8-DS_ALUM	8	20	60	8	2	1
FTTMD-10-R1-25-2C-75-H10-DS_ALUM	10	25	75	10	2	1
FTTMD-12-R1-30-2C-75-H12-DS_ALUM	12	30	75	12	2	1
FTTMD-14-R1-45-2C-100-H14-DS_ALUM	14	45	100	14	2	1
FTTMD-16-R1-45-2C-100-H16-DS_ALUM	16	45	100	16	2	1
FTTMD-20-R1-45-2C-100-H20-DS_ALUM	20	45	100	20	2	1
FTTMD-25-R1-45-2C-100-H25-DS_ALUM	25	45	100	25	2	1

CÓDIGO DSDRILL	D	L1	L2	d	C	R
FTTMD-08-R1-20-2C-100-H8-DS_POWER	8	20	100	8	2	1
FTTMD-10-R1-25-2C-100-H10-DS_POWER	10	25	100	10	2	1
FTTMD-12-R1-30-2C-100-H12-DS_POWER	12	30	100	12	2	1
FTTMD-14-R1-45-2C-125-H14-DS_POWER	14	45	125	14	2	1
FTTMD-16-R1-45-2C-125-H16-DS_POWER	16	45	125	16	2	1
FTTMD-20-R1-45-2C-125-H20-DS_POWER	20	45	125	20	2	1
FTTMD-25-R1-45-2C-125-H25-DS_POWER	25	45	125	25	2	1

DS_ALUM

Topo Esférico

Ø 3-20 | 2C | 45°

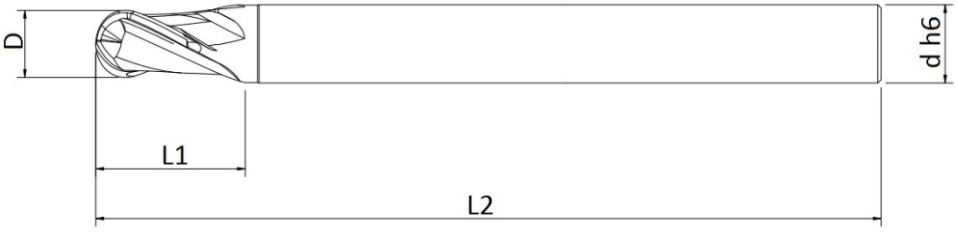

CÓDIGO DSDRILL	D	L1	L2	d	C
FTEMD-03-6-2C-50-H3-DS_ALUM	3	6	50	3	2
FTEMD-04-8-2C-50-H4-DS_ALUM	4	8	50	4	2
FTEMD-05-10-2C-50-H5-DS_ALUM	5	10	50	5	2
FTEMD-06-12-2C-50-H6-DS_ALUM	6	12	50	6	2
FTEMD-08-16-2C-60-H8-DS_ALUM	8	16	60	8	2
FTEMD-10-20-2C-75-H10-DS_ALUM	10	20	75	10	2
FTEMD-12-25-2C-75-H12-DS_ALUM	12	25	75	12	2
FTEMD-14-30-2C-75-H14-DS_ALUM	14	30	75	14	2
FTEMD-16-30-2C-75-H16-DS_ALUM	16	30	75	16	2
FTEMD-20-40-2C-100-H20-DS_ALUM	20	40	100	20	2

CÓDIGO DSDRILL	D	L1	L2	d	C
FTEMD-03-6-2C-75-H3-DS_ALUM	3	6	75	3	2
FTEMD-04-8-2C-75-H4-DS_ALUM	4	8	75	4	2
FTEMD-05-10-2C-75-H5-DS_ALUM	5	10	75	5	2
FTEMD-06-12-2C-100-H6-DS_ALUM	6	12	100	6	2
FTEMD-08-16-2C-100-H8-DS_ALUM	8	16	100	8	2
FTEMD-10-20-2C-100-H10-DS_ALUM	10	20	100	10	2
FTEMD-12-25-2C-100-H12-DS_ALUM	12	25	100	12	2
FTEMD-14-30-2C-110-H14-DS_ALUM	14	30	110	14	2
FTEMD-16-30-2C-110-H16-DS_ALUM	16	30	110	16	2
FTEMD-20-40-2C-125-H20-DS_ALUM	20	40	125	20	2

Referência de Dados de Corte - Linha DS_ALUM

P	M	K	N	S	H
			●		

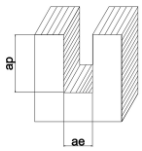

MATERIAL	DUREZA	VC (m/min)	D										
			3	4	5	6	8	10	12	14	16	20	25
			fz² (mm/z)										
3.3547 / EM AW-5083	270 N/mm²	350	0.020	0.025	0.040	0.035	0.045	0.060	0.070	0.080	0.090	0.110	0.130
3.4365 / EM AW-7075	520 N/mm²	350	0.020	0.025	0.040	0.035	0.045	0.060	0.070	0.080	0.090	0.110	0.130
COPPER	280 N/MM²	250	0.010	0.015	0.020	0.025	0.035	0.045	0.050	0.055	0.065	0.080	0.105
METAIS NÃO FERROSOS	<800 N/mm²	250	0.010	0.015	0.020	0.025	0.035	0.045	0.050	0.055	0.065	0.080	0.105

ae = 1 x D

ap = 1 x D

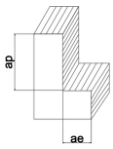

MATERIAL	DUREZA	VC (m/min)	D										
			3	4	5	6	8	10	12	14	16	20	25
			fz² (mm/z)										
3.3547 / EM AW-5083	270 N/mm²	500	0.025	0.030	0.035	0.040	0.050	0.070	0.080	0.095	0.110	0.130	0.150
3.4365 / EM AW-7075	520 N/mm²	500	0.025	0.030	0.035	0.040	0.050	0.070	0.080	0.095	0.110	0.130	0.150
COPPER	280 N/MM²	300	0.015	0.020	0.025	0.030	0.040	0.050	0.060	0.070	0.080	0.100	1.120
METAIS NÃO FERROSOS	<800 N/mm²	300	0.015	0.020	0.025	0.030	0.040	0.050	0.060	0.070	0.080	0.100	1.120

ae = 0.5 x D

ap = 1 x D

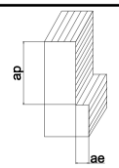

MATERIAL	DUREZA	VC (m/min)	D										
			3	4	5	6	8	10	12	14	16	20	25
			fz² (mm/z)										
3.3547 / EM AW-5083	270 N/mm²	600	0.035	0.040	0.045	0.050	0.060	0.080	0.100	0.115	0.130	0.160	0.195
3.4365 / EM AW-7075	520 N/mm²	600	0.035	0.040	0.045	0.050	0.060	0.080	0.100	0.115	0.130	0.160	0.195
COPPER	280 N/MM²	400	0.025	0.030	0.035	0.040	0.050	0.060	0.070	0.80	0.090	0.110	0.135
METAIS NÃO FERROSOS	<800 N/mm²	400	0.025	0.030	0.035	0.040	0.050	0.060	0.070	0.80	0.090	0.110	0.015

ae = 0.1 x D

ap = 1.5 x D

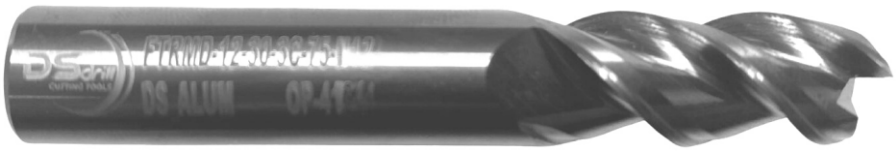

DSdrill CUTTING TOOLS

Pensou em ferramentas, consulte DSDrill.

MAIS INFORMAÇÕES

☎ (11) 3969-5717

(11) 97632-0007

Segunda à Sexta - 7:30h às 17:15h

Av Queirós dos Santos, 1867 | B. Casa Branca | Santo André | SP | CEP: 09015-311

www.dsdrill.com.br

dsdrillcuttingtools